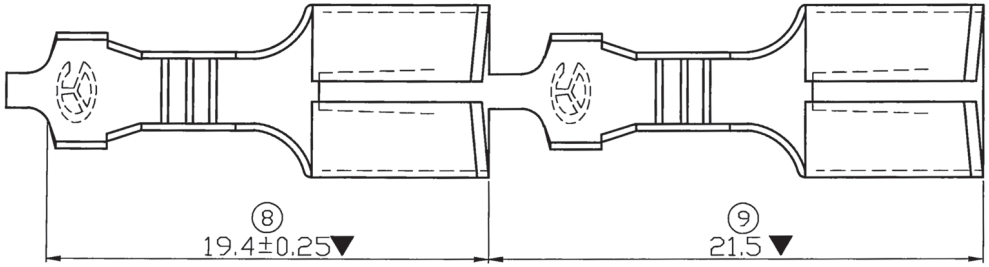

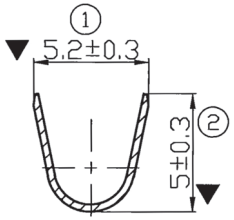

SEC. A-A

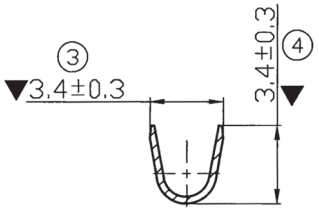

SEC. B-B

NOTES:

1.插拔力：
  1.1 插入力：0.5~2.0 KGF
  1.2 拔出力：0.5~2.0 KGF

2.對手件：250型 TAB=0.8

3.包裝數量：5000 PCS/R

1.INSERTED/TENSILE FORCES:
  1.1 INSERTED FORCE: 0.5~2.0 KGF.
  1.2 TENSILE FORCE: 0.5~2.0 KGF.

2.MATING PART: 250-TYPE TAB=0.8

3.PACKING Q'TY: 5000 PCS/R

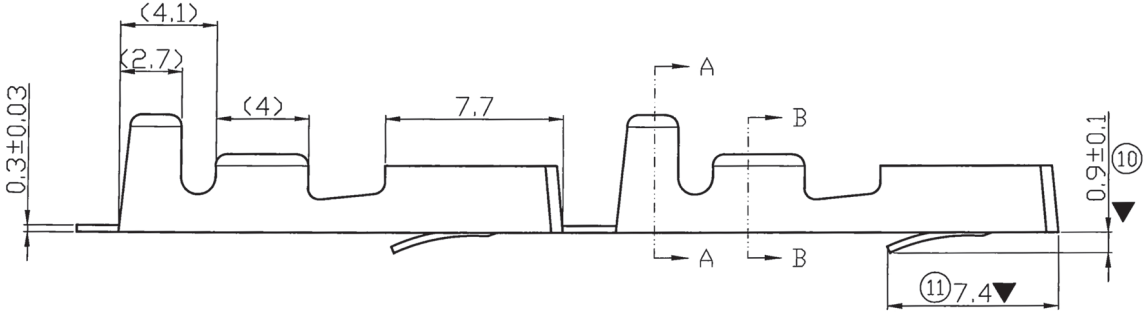

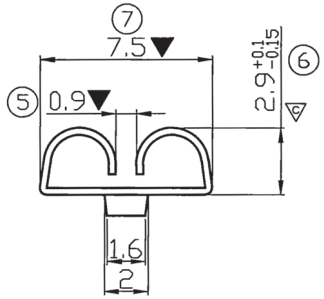

PART NO. 編號	PITCH 間距	MM 線徑	AWG WIRE SIZE	MATERIAL 材質	FINISH 表面處理	REMARK 備註
804502C BL2	-	0.5~2.0	20~14	黃銅 BRASS	鍍錫 TIN PLATING	
804502C BL0	-	0.5~2.0	20~14	黃銅 BRASS	素材 NONE	
804502C BS2	21.5	0.5~2.0	20~14	黃銅 BRASS	鍍錫 TIN PLATING	
804502C BS0	21.5	0.5~2.0	20~14	黃銅 BRASS	素材 NONE	

版本 REV.	工程變更 ECN NO.	日期 DATE	更改者 DWN
			-
			-
4	151007 PD-2015036	2014/9/19	KIM
3	131215	2014/9/19	KIM
2	版面更新	2012/7/20	KIM
1	DIM 120101	2012/3/8	KIM

比例/SCALE: FREE

圖紙/SIZE: A4

THIRD ANGLE PROJECTION

管制符號 QUALITY SYMBOLS: ▼ = 10; ▽ = 1

版本 REV.: 4

一般公差 GENERAL TOLERANCE

<1.0	±0.10
1.0~5.0	±0.15
5.0~10.0	±0.20
10.0~20.0	±0.25
>20.0	±0.30
( )	REF.
ANGLE	±3°

DIMENSION IN [MM] INCH

		DATE
DRAWN BY	KIM	2011/12/14
CHECKED BY	MIRO	2011/12/14
APPROVED BY	CYJ	2011/12/15
DOC. NO.	S-804502C	

大廣有限公司 DA KOANG CO., LTD.

品名/PART NAME: 250-8母勾 250-TYPE FEMALE TERMINAL

編號/PART NO.: 3245A

THIS DRAWING IS THE EXCLUSIVE PROPERTY OF CY PRECISION IND. CO., LTD. WITHOUT THEIR CONSENT IT MAY NOT BE PEPRODUCED OR GIVEN TO THIPD PARTIES.

SHEET NO. 1 OF 1