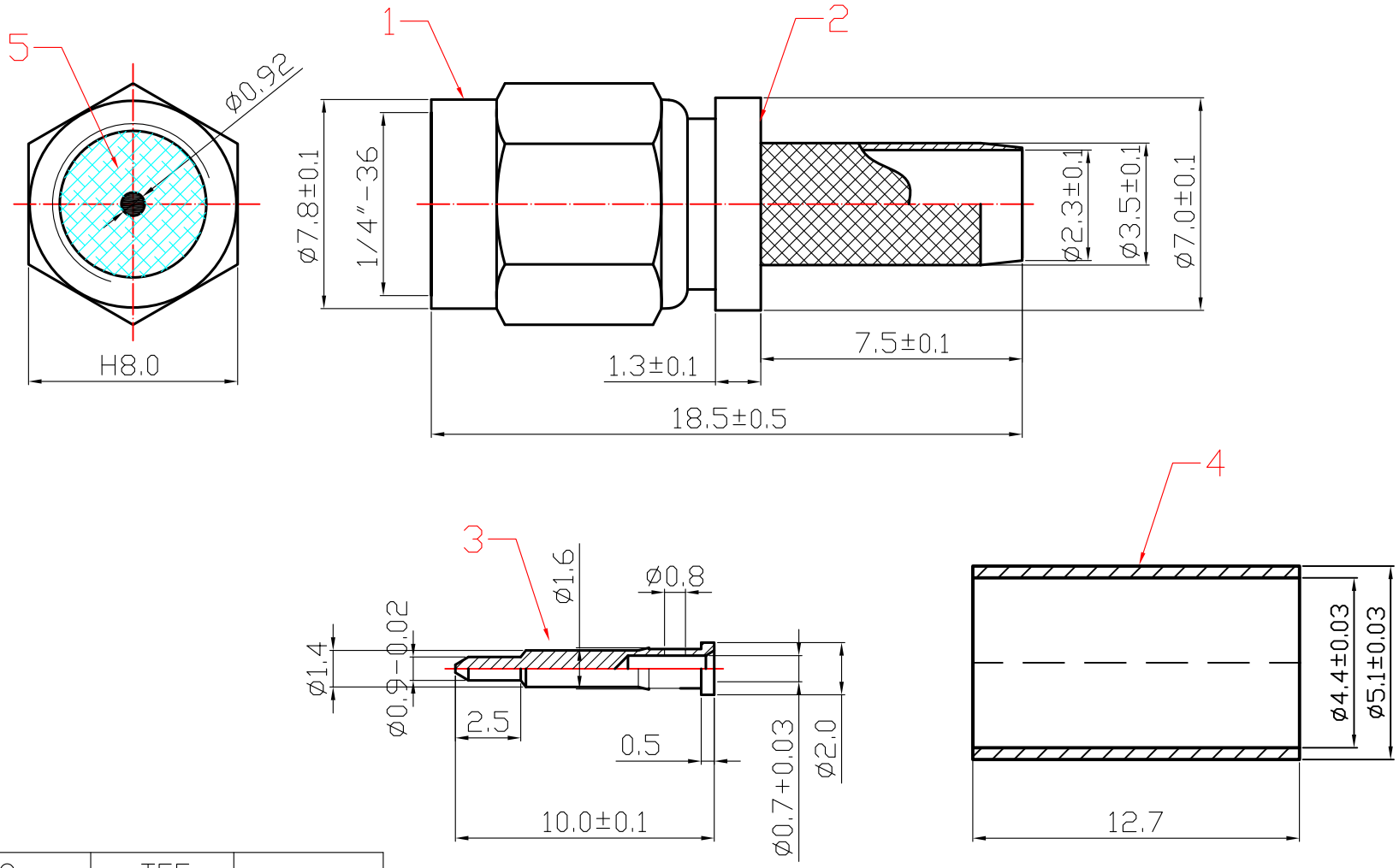


| ITEM | DESIGNATION | MATERIAL | |
|---|---|---|---|
| 5 | DIELECTRIC | TEF | |
| 4 | CRIMPING TUBE | BRASS | GLODEN |
| 3 | PIN | BRASS | GLODEN |
| 2 | BODY | BRASS | GLODEN |
| 1 | SHELL | BRASS | GLODEN |

| TOLERANCE | |
|---|---|
| 0 - 10 | ±0.05 |
| 10 - 99 | ±0.5 |
| 100 - 999 | ±10.0 |
| 1000 - 9999 | ±100.00 |
| 10000 - 99999 | ±1000.00 |

| SIGNATURES | DATE |
|---|---|
| DRAFT: ZHOU XIN GUO | 22-08-2017 |
| CHECKED: | |
| APPROVAL: | |

大 廣 有 限 公 司
DA KOANG CO., LTD.

| REV. | PART NO.& SAMPLE NO. | BY |
|---|---|---|
| A0 | 1254B/174U | |
| B | | |

| SHEET | SCALE | UNIT | REV. |
|---|---|---|---|
| OF | 1:1 | mm | ø |

| | |
|---|---|
| TITLE | SMA Male Crimp Type |
| CUSTOMER | |